SUMO INDUSTRIAL

SERIES 2" SUBMERSIBLE PUMPS 50QJ1

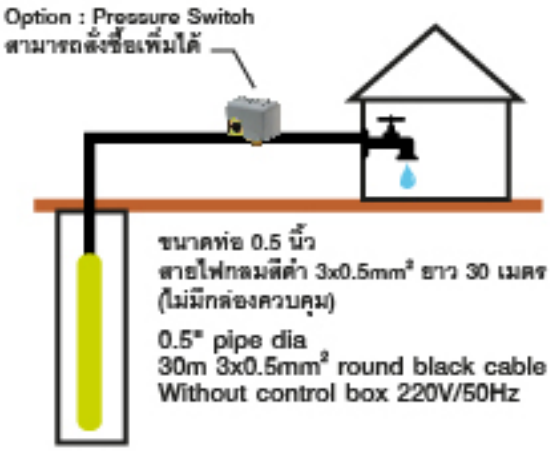

เหมาะกับการใช้งานในบ้านพักอาศัย

อัตราการไหล 1 คิว/ชม. ที่ความสูง 22 เมตร
30 ใบพัด สายไฟสีดำ 3x0.5mm สายไฟยาว 30 เมตร

50 QJ D 1 30–0.25

- Motor power (kW)
- Stage
- Capacity (m³/h)
- Single phase motor (Three phase without D)
- QJ Series submersible pump
- Well diameter: >55mm (2")

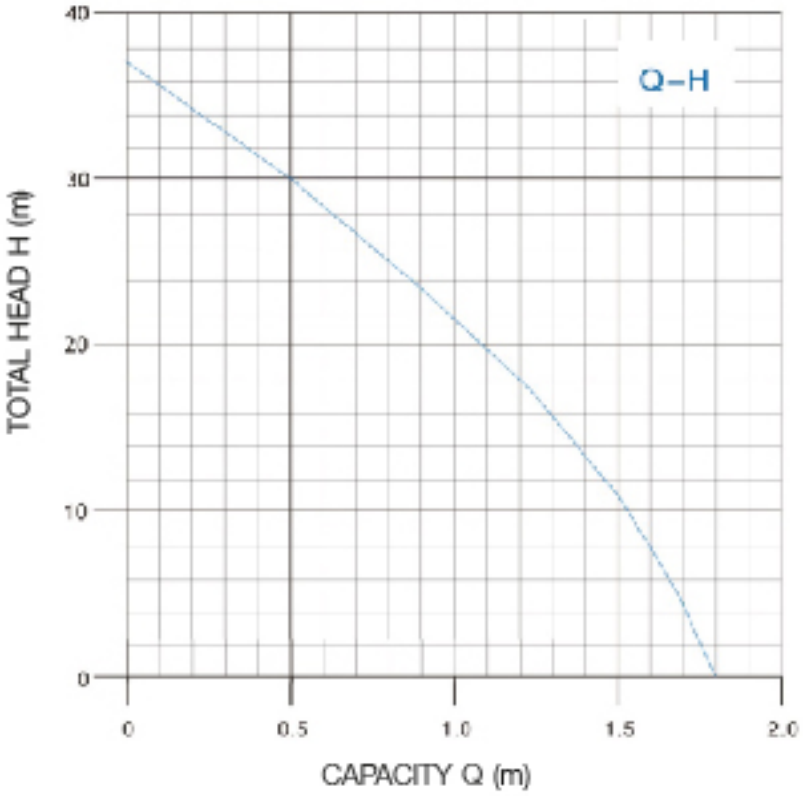

• Pump/Motor

Qmax: 1.8(m³/h)
Insulation class: B
Protection grade: IP68
Maximum diameter: Φ53mm
Highest temperature of liquid: 35°C

OUTLET G 1/2"

• PERFORMANCE TABLE: rpm: 2850 Outlet: G1/2"

Type	Motor power		Capacity and head								Length (mm)	Price
Single phase 220–240V~ 50Hz			l/min	0	8	13	17	20	25	28		
	kW	Hp	m³/h	0	0.5	0.8	1	1.2	1.5	1.7		
▶ 50QJD130-0.25	0.25	0.33	1.8	37	30	25	22	19	10	4	1325	7,500.-

▶ = มีสินค้า

SUMO INDUSTRIAL

SERIES 3" SUBMERSIBLE PUMPS 75QJ2

เหมาะกับการใช้งานในบ้านพักอาศัย
อัตราการไหล 2 คิว/ชม. ที่ความสูง 65 เมตร
24 ใบพัด สายไฟสีฟ้า 4x1 mm² สายไฟยาว 50 เมตร

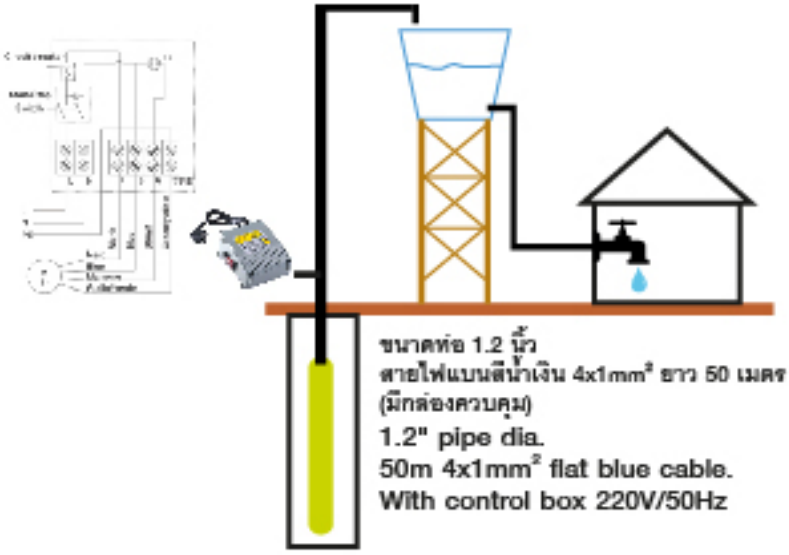

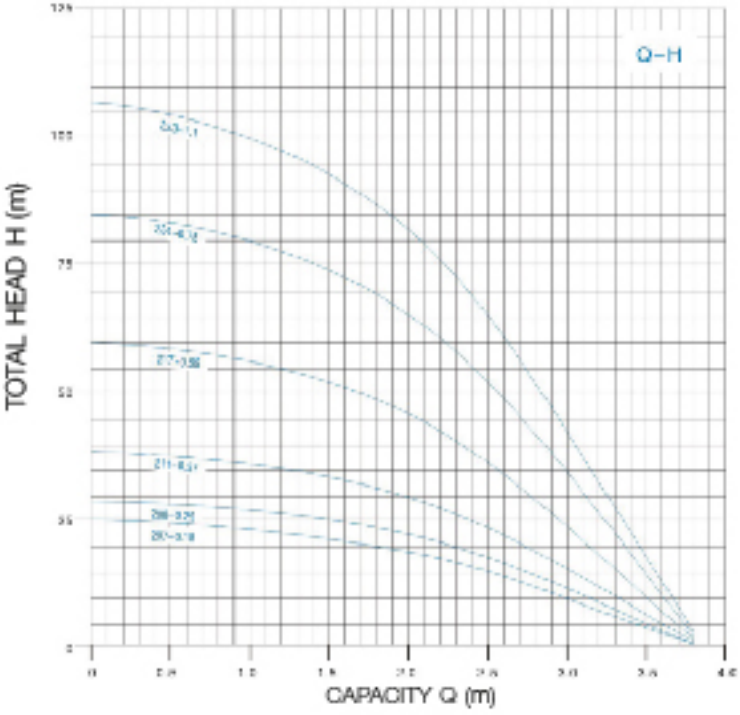

75 QJ D 2 24-0.75

- Motor power(kW)
- Stage
- Capacity(m³/h)
- Single phase motor (Three phase without D)
- QJ Series submersible pump
- Well diameter : >80mm(3")

• PERFORMANCE TABLE:

rpm: 2850 Outlet: G 1.2"

Type: Single phase 220-240V~ 50Hz	Motor power kW	Motor power Hp		Capacity and head L/min	0	6	17	25	30	33	42	50	63	Length (mm)	Price
				m³/h	0	0.5	1	1.5	1.8	2	2.5	3	3.8		
75QJD207-0.18	0.18	0.24	Head (m)		25	23	22	21	20	19	15	10	1	663	
75QJD208-0.25	0.25	0.33			28	27	26	25	23	22	17	11	1	720	
75QJD211-0.37	0.37	0.5			39	37	35	34	32	30	24	15	2	828	
75QJD217-0.55	0.55	0.75			60	58	56	52	49	46	37	23	3	1054	
▶ 75QJD224-0.75	0.75	1			85	82	79	74	70	65	52	33	3	1316	11,000.-
75QJD233-1.1	1.1	1.5			110	107	101	95	90	85	67	42	4	1604	

▶ - มีสินค้า

• Pump/Motor

Q max: 3.8(m³/h)
Insulation class: B
Protection grade: IP 68
Maximum diameter: ¢ 75mm
Highest temperature of liquid: 35°C

OUTLET G 1.2"

SUMO INDUSTRIAL

SERIES SUBMERSIBLE PUMPS 4" 100QJ5

หมดแล้วใช้รุ่น 4SRm511 แทน

เหมาะกับงาน เพาะปลูก เกษตรกรรม

อัตราการไหล 5 คิว/ชม. ที่ความสูง 45 เมตร
9 ใบพัด, สายไฟสีฟ้า 4x2mm² สายไฟยาว 50 เมตร

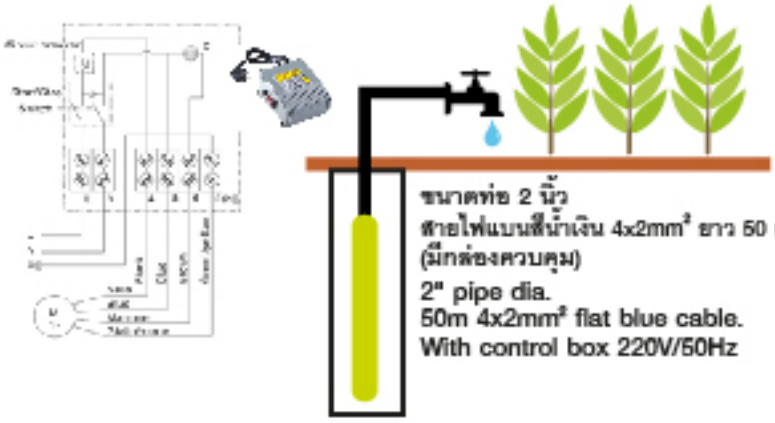

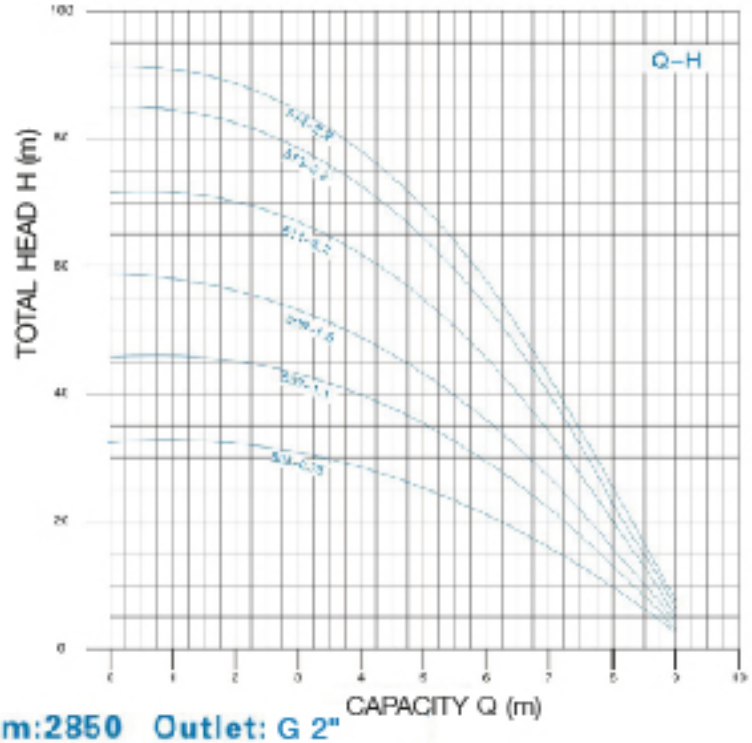

100 QJ D 6 13 - 2.2

- Motor power(kW)
- Stage
- Capacity(m³/h)
- Single phase motor (Three phase without D)
- QJ Series submersible pump
- Well diameter: ≥100mm(4")

• PERFORMANCE TABLE:

rpm:2850 Outlet: G 2"

Type: Single phase 220–240V–50Hz	Type: Three phase 380–415V–50Hz	Motor power kW	Motor power Hp	Capacity and head l/min	0	67	83	100	117	133	150	Length (mm)	Price
				m³/h	0	4	5	6	7	8	9		
100QJD505–0.75	100QJ505–0.75	0.75	1	Head (m)	33	28	25	21	16	9	2	740	
100QJD507–1.1	**100QJ507–1.1**	**1.1**	**1.5**		**46**	**39**	**35**	**29**	**22**	**13**	**3**	**828**	
▶100QJD509–1.5	100QJ509–1.5	1.5	2		59	50	45	37	28	16	4	920	15,000.-
100QJD511–2.2	**100QJ511–2.2**	**2.2**	**3**		**72**	**62**	**55**	**45**	**34**	**20**	**5**	**1060**	
100QJD513–2.2	100QJ513–2.2	2.2	3		85	73	65	53	40	23	6	1127	
100QJD514–2.2	**100QJ514–2.2**	**2.2**	**3**		**92**	**78**	**70**	**59**	**45**	**25**	**7**	**1160**	

▶ = มีสินค้า

• Pump/Motor

NEMA standard
Q max: 9m³/h
Insulator class: B
Protection grade: IP 68
Maximum diameter: ϕ 95mm
Highest temperature of liquid: 35°C
Options of different materials are available.

OUTLET G 2"

ปั๊มน้ำบาดาล 4"
SUBMERSIBLE PUMP

SERIES
4SRm5
(100QJ5)

เหมาะกับงาน **เพาะปลูก เกษตรกรรม**

อัตราการไหล 5 คิว/ชม. ที่ความสูง 55 เมตร

11 ใบพัด, สายไฟสีฟ้า 4x2mm² สายไฟยาว 50 เมตร

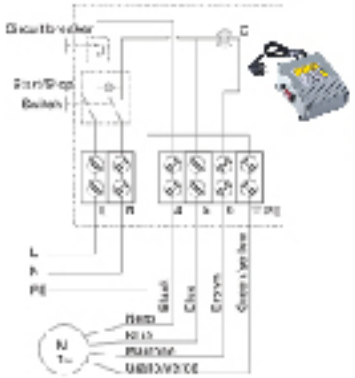

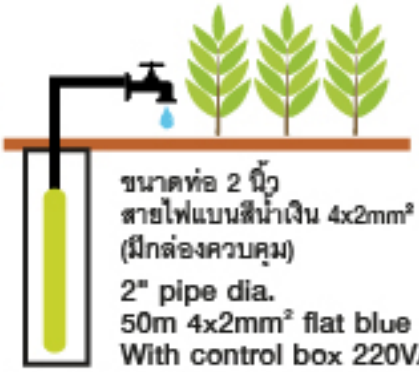

ขนาดท่อ 2 นิ้ว
สายไฟแบนสีน้ำเงิน 4x2mm² ยาว 50 เมตร
(มีกล่องควบคุม)

2" pipe dia.
50m 4x2mm² flat blue cable.
With control box 220V/50Hz

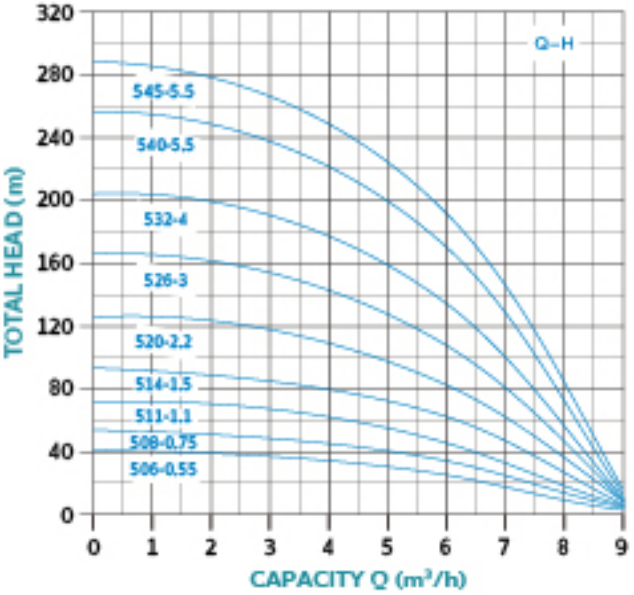

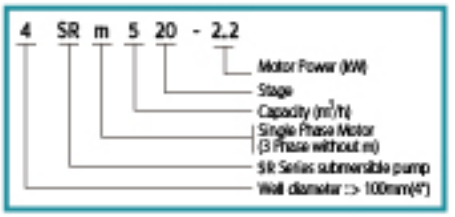

OUTLET G 2"

PERFORMANCE TABLE : RPM : 2850

TYPE SINGLE PHASE 220-240V~ 50Hz	MOTOR POWER		CAPACITY AND HEAD									LENGTH (mm)	PRICE
	kW	HP	L/min m³/h	0 0	50 3	67 4	83 5	100 6	133 8	150 9			
4SRm506-0.55	0.55	0.75	HEAD (m)	38	37	35	30	28	11	6		736	
4SRm508-0.75	0.75	1		51	49	46	40	35	14	7		823	
4SRm511-1.1	1.1	1.5		70	67	64	55	48	20	8		1007	**16,000.-**
4SRm514-1.5	1.5	2		90	85	81	70	62	25	9		1152	
4SRm520-2.2	2.2	3		128	122	116	100	88	36	11		1499	
4SRm526-3	3	4		166	159	151	130	114	47	12		1700	
-	4	5.5		205	195	186	160	141	58	13		2004	
-	5.5	7.5		256	244	232	200	176	72	14		2381	
-	5.5	7.5		288	275	261	225	198	81	16		2587	

PUMP/MOTOR

NEMA Standard

Q max	: 9(m³/h)
Insulation class	: B
Protection grade	: IP 68
Maximum diameter	: ø98mm
Highest tempeature of liqiud	: 35°C

Option of different materials are available.

SUMO® INDUSTRIAL

SERIES 3" SUBMERSIBLE MOTORS

3QSDY

มอเตอร์สำหรับรุ่น QJ 3"

Pre-Order

3 QS D Y - 1.1

- 1.1 — Motor power(kW)
- Y — Oil filled type
- D — Single phase motor
- QS — QS Series submersible motor
- 3 — Well diameter: ≥80mm(3")

• TECHNICAL DATA:

-Motor

Speed: **2850rpm**
Voltage: **220V~240V~/50Hz**
Insulation class: **B**
Protection grade:**IP 68**
Highest temperature of liquid:**35℃**
Maximum content of solid substance:**40gr/m³**
Motor casing:stainless steel
With sandproof cover/pressure balance membrane/
mechanical seal with high performance.

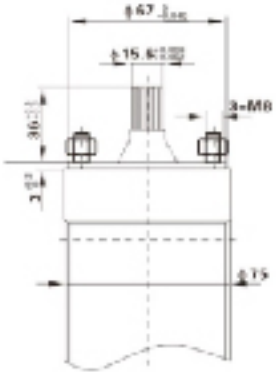

• SINGLE PHASE DIMENSIONS OF MOTOR UNIT:

Type single phase 220V~240V~ 50Hz	For Model	Motor power kW	Motor power Hp	Capacitor 450V μF	Current Rated A	Efficiency % η	Power factor Cos φ	Length (mm)
3QSDY-0.18		0.18	0.24	12	1.8	42	0.93	329
3QSDY-0.25		**0.25**	**0.33**	**12**	**2.3**	**44**	**0.93**	**359**
3QSDY-0.37		0.37	0.5	16	3	46	0.93	384
3QSDY-0.55		**0.55**	**0.75**	**25**	**4.5**	**48**	**0.93**	**419**
3QSDY-0.75	75QJD224 3SKm100	0.75	1	30	5.8	51	0.93	464
3QSDY-1.1		**1.1**	**1.5**	**35**	**7.7**	**54**	**0.93**	**504**

● Wiring diagram of motor

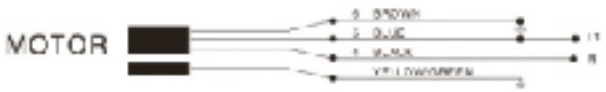

● Each single phase three wires motor should equip a control box

SUMO® INDUSTRIAL

SERIES 4" SUBMERSIBLE MOTORS
4QSDY

มอเตอร์สำหรับรุ่น QJ 4"

Pre-Order

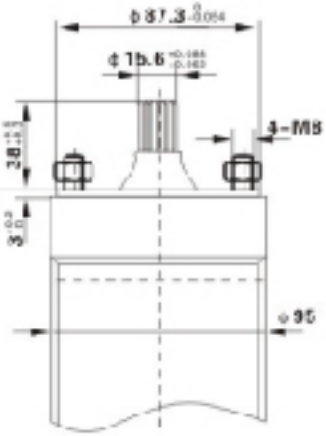

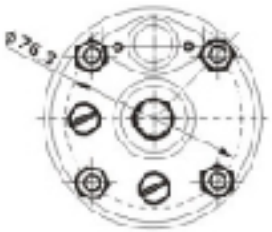

4 QS D Y - 2.2
- Motor power(KW)
- Oil filled type
- Three phase motor
- QS Series submersible motor
- Well diameter: 100mm(4")

• TECHNICAL DATA:

-Motor

Speed: 2850rpm
Insulation class: B
Protection grade:IP 68
Highest temperature of liquid:35℃
Maximum content of solid substance:40gr/m³
Flange and coupling according to NEMA standard
Motor casing: stainless steel
With sandproof cover / pressure balance membrane/mechanical seal with high performance.

• SINGLE PHASE DIMENSIONS OF MOTOR UNIT:

Type Single phase 220V-240V-50Hz	Motor power kW	Motor power HP	Capacitor 450V μF	Current Rated A	Efficiency % η	Power factor Cos ϕ	Length (mm)	For Model
4QSDY-0.37	0.37	0.5	18	2.9	55	0.93	362	
4QSDY-0.55	**0.55**	**0.75**	**25**	**4.2**	**58**	**0.93**	**377**	
4QSDY-0.75	0.75	1	30	5.4	61	0.93	402	
4QSDY-1.1	**1.1**	**1.5**	**35**	**7.7**	**64**	**0.93**	**422**	
4QSDY-1.5	1.5	2	45	9.7	67	0.93	447	100QJD509
4QSDY-2.2	**2.2**	**3**	**70**	**15.6**	**68**	**0.93**	**482**	

• Wiring diagram of motor

• Each single phase three wires motor should equip a control box

■ - สินค้าที่มีจำหน่าย

• THREE PHASE DIMENSIONS OF MOTOR UNIT:

Type Three phase 380V-415V-50Hz	Motor power kW	Motor power HP	Current Rated A	Efficiency % η	Power factor Cos ϕ	Length (mm)
4QSY-0.37	0.37	0.5	1.1	58	0.84	331
4QSY-0.55	**0.55**	**0.75**	**1.5**	**61**	**0.85**	**346**
4QSY-0.75	0.75	1	2.2	64	0.85	371
4QSY-1.1	**1.1**	**1.5**	**3**	**67**	**0.86**	**391**
4QSY-1.5	1.5	2	3.9	70	0.86	416
4QSY-2.2	**2.2**	**3**	**5.5**	**72**	**0.87**	**441**

SUMO INDUSTRIAL

SERIES SUBMERSIBLE PUMPS 3", 4"
75QJD, 100QJD

The structure, code and name of the pump

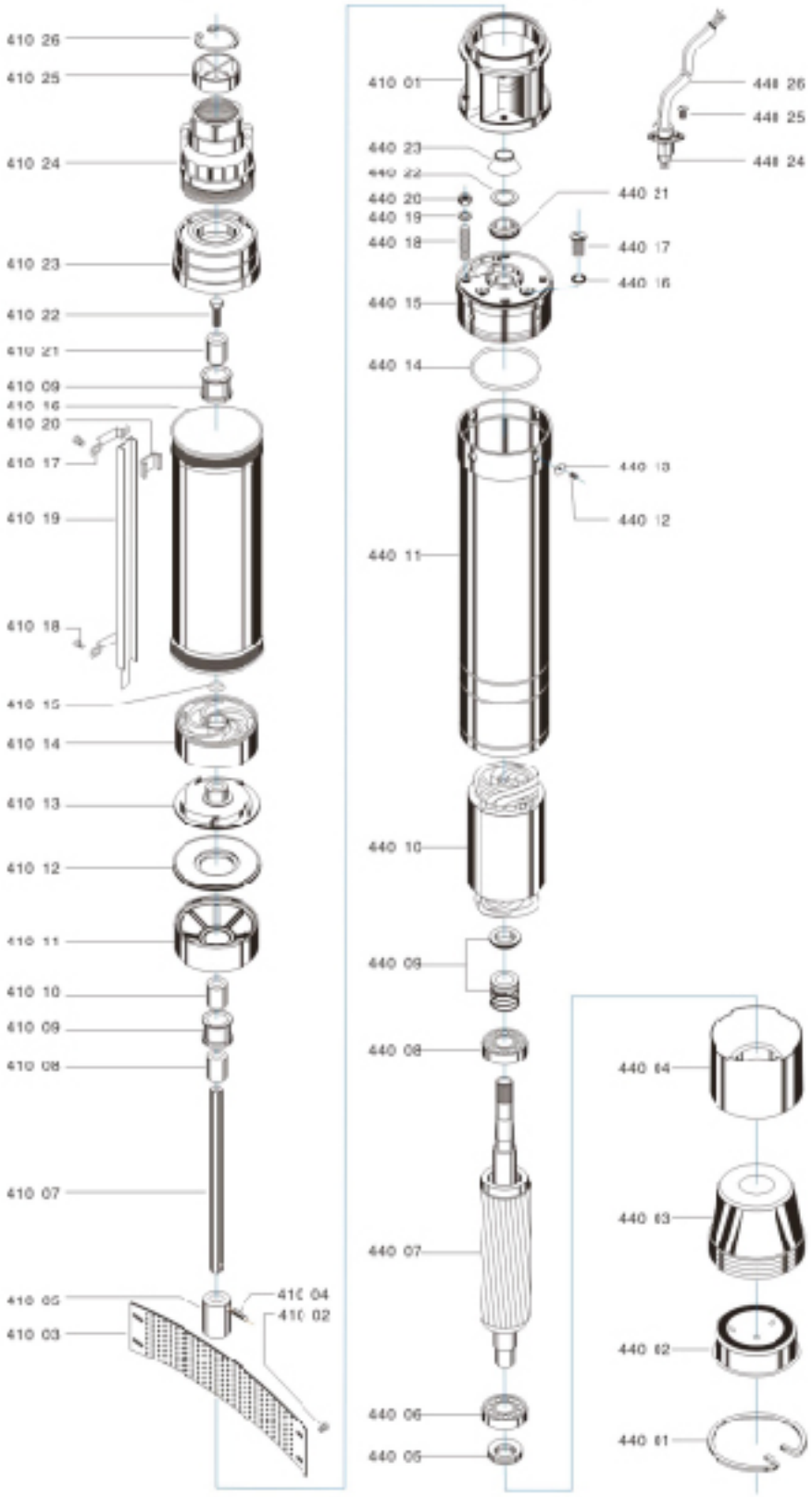

41001	Suction support
41002	**Screw**
41003	Strainer
41004	**Shaft pin**
41005	Coupling
41006	**Bushing**
41007	Shaft
41010	**Bearing bush**
41009	Guide bush
41012	**Diffuser Cover**
41011	Intermediate support
41014	**Diffuser**
41013	Impeller
41016	**Pump pipe**
41015	Sealing gasket
41018	**Screw**
41017	Holder pipe
41020	**Cable shield**
41019	Cable cover
41022	**Screw**
41021	Bearing bush
41024	**Outlet**
41023	Valve seat
41026	**Clamping spring**
41025	Valve
44001	Clamping spring
44002	**End cover**
44003	Rubber cup
44004	**Bearing seat**
44005	Thrust bearing
44006	**Deep groove ball bearing**
44007	Motor rotor
44008	**Deep groove ball bearing**
44009	Mechanical seal
44010	**Motor stator**
44011	Motor pipe
44012	**Screw**
44013	Locking ring
44014	**"O" ring**
44015	Oil chamber
44016	**"O" ring**
44017	Screw
44018	**Stud**
44019	Washer
44020	**Nut**
44021	Static ring
44022	**Gasket**
44023	Sand proof cap
44024	**Cable sheld sleeve**
44025	Screw
44026	**Cable**

SUMO® INDUSTRIAL

SERIES
STARTING CONTROLLERS

QK102-QK103

ตู้คุมปั๊มน้ำบาดาล

QK102–QK103 Series starting controller for single phase motor

TECHNICAL DATA:

- **Single phase motor starting controller**

Single phase capacitor operating motor is equipped with an external capacitor and a over–load protector in the starting controller which can automatically break down power supply (manual recover)when motor over–loading.

QK 1 0 2 – 0.37

- 0.37 — Motor power(kW)
- 2 — Design number
- 0 — Manual controller
- 1 — Single phase
- QK — QK Series controller

- **Suitable application range**

–Type of motor: Single phase motor
–Motor power: **0.18–1.5kW**
–Voltage: 220–240V~
–Frequency: 50Hz

- **Product functions**

–Protect against short circuit
Protect against over current

- **Operating method**

–Manual control

- **Installation environment index**

-Grade of protection: IP20
Environment temperature: –25℃–+55℃
Environment humidity: (20–90)%RH

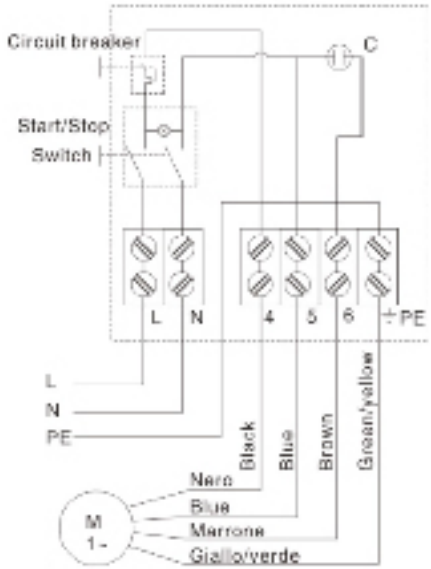

Type Single Phase 220V-240V~ 50Hz	For Model	Motor Power		Motor Current Rated	Capacitor 450V	Circuit Breaker Current	Price
		kW	Hp	A	μ F	A	
QK102-0.25		0.25	0.33	2.1	16.5	3	
QK102-0.37		0.37	0.5	2.9	18	4	
■ **QK102-0.55**	75QJD217	0.55	0.75	4.2	25	5	750.-
■ **QK102-0.75**	75QJD224	0.75	1	5.4	30	6	750.-
QK102-1.1		1.1	1.5	7.7	35	8	
■ **QK102-1.5**	100QJD509, 100QJD808	1.5	2	9.7	45	10	900.-
QK103-2.2		2.2	3	15.6	70	13	

■ มีสินค้า

SUMO INDUSTRIAL

SERIES 4" SUBMERSIBLE PUMPS

4SR3

เหมาะกับการใช้งานใน**บ้านพักอาศัย**

อัตราการไหล 3 คิว/ชม. ที่ความสูง 60 เมตร

12 ใบพัด สายไฟสีฟ้า 4x1.5mm² สายยาว 50 เมตร

จำนวนใบพัดน้อยแต่ประสิทธิภาพในการส่งสูงกว่า
เมื่อเทียบกับรุ่น QJ322 ขนาด 3 คิว 22 ใบพัด

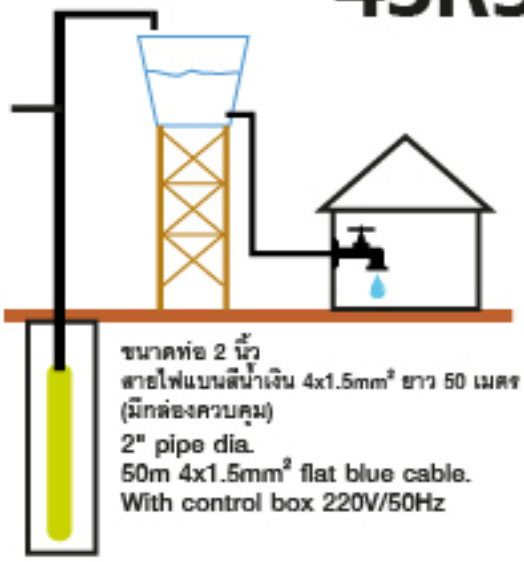

4 SR m 3 30 - 2.2

- Motor power(kW)
- Stage
- Capacity(m³/h)
- Single phase motor (Three phase without m)
- SR Series submersible pump
- Well diameter: φ100mm(4")

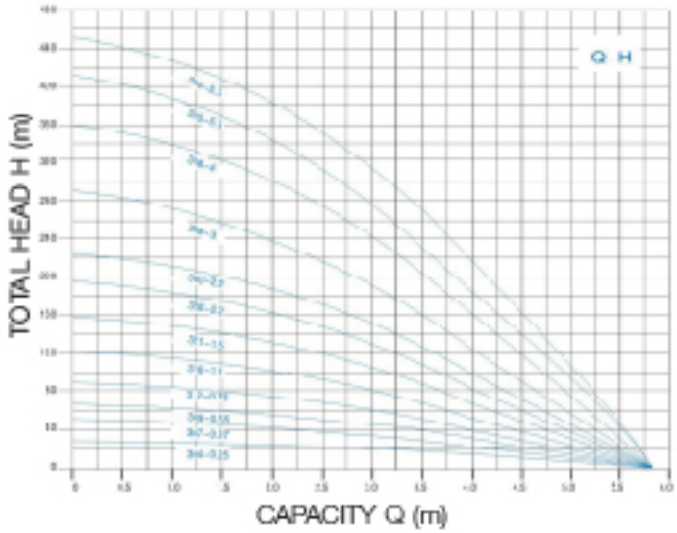

▶ - มีสินค้า

• PERFORMANCE TABLE:

rpm:2850 Outlet: G 2"

Type: Single phase 220–240V – 50Hz	Type: Three phase 380–415V – 50Hz	Motor power kW	Motor power HP	l/min	0	33	42	50	58	67	83	97	Length (mm)	Price
				m³/h	0	2	2.5	3	3.5	4	5	5.8		
4SRm304-0.25	4SR304-0.25	0.25	0.33	Head (m)	30	25	23	20	18	13	4	2	511	
4SRm307-0.37	4SR307-0.37	0.37	0.5		53	44	40	35	32	22	6	2	720	
4SRm309-0.55	4SR309-0.55	0.55	0.75		63	56	51	45	41	29	8	3	799	
▶ 4SRm312-0.75	4SR312-0.75	0.75	1		90	75	68	60	55	38	10	5	907	12,000.-
4SRm316-1.1	4SR316-1.1	1.1	1.5		120	100	91	80	73	51	12	7	1108	
4SRm321-1.5	4SR321-1.5	1.5	2		158	131	120	105	96	67	14	7	1301	
4SRm326-2.2	4SR326-2.2	2.2	3		195	163	148	130	119	83	18	8	1594	
4SRm330-2.2	4SR330-2.2	2.2	3		225	188	171	150	137	96	18	11	1712	
—	4SR338-3	3	4		285	238	217	190	173	122	20	13	1983	
—	4SR348-4	4	5.5		360	300	274	240	219	154	21	14	2378	
—	4SR355-5.5	5.5	7.5		413	344	314	275	251	176	22	15	2693	
—	4SR360-5.5	5.5	7.5		450	375	342	300	274	192	23	16	2879	

• Pump/Motor

NEMA standard
Q max: 5.8m³/h
Insulation class: B
Protection grade: IP 68
Maximum diameter: φ98mm
Highest temperature of liquid: 35°C
Options of different materials are available.

OUTLET G 2"

SUMO INDUSTRIAL

SERIES 4"
SUBMERSIBLE PUMPS

4PDm

มอเตอร์สำหรับรุ่น SR 4"

Pre-Order

- **TECHNICAL DATA:**

-Motor

Speed: **2850rpm**
Insulation class: **B**
Protection graded:**IP 68**
Highest temperature of liquid:**35℃**
Maximum content of solid substance:**40gr/m³**
Flange and coupling according to **NEMA** standard
Motor casing: stainless steel
Maximum diameter: **ø 98 mm**
With sandproof cover / pressure balance membrane/mechanical seal with high performance.

4 PD m - 2.2
- 2.2: Motor power (kW)
- m: Three phase motor (Three phase without m)
- PD: PD Series submersible motor
- 4: Well diameter: 100mm(4")

- **SINGLE PHASE DIMENSIONS OF MOTOR UNIT:**

Type	Motor power		Capacitor 450V	Current Rated	Efficency %	Power factor	Length (mm)
Single phase 220V-240V-50Hz	kW	HP	μF	A	η	cos φ	
4PDm-0.25	0.25	0.33	20	3	54	0.93	323
4PDm-0.37	**0.37**	**0.5**	**25**	**3.6**	**55**	**0.93**	**343**
4PDm-0.55	0.55	0.75	30	4.8	58	0.93	363
4PDm-0.75	**0.75**	**1**	**40**	**6.3**	**61**	**0.93**	**383**
4PDm-0.9	0.9	1.2	40	7.7	63	0.93	403
4PDm-1.1	**1.1**	**1.5**	**45**	**8.6**	**64**	**0.93**	**428**
4PDm-1.5	1.5	2	50	10.6	67	0.93	473
4PDm-2.2	**2.2**	**3**	**80**	**15.6**	**68**	**0.93**	**580**

- Wiring diagram of motor

- Each single phase three wires motor should equip a control box

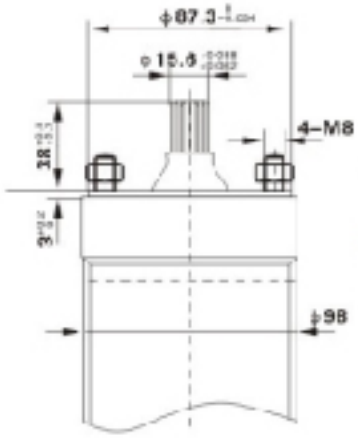

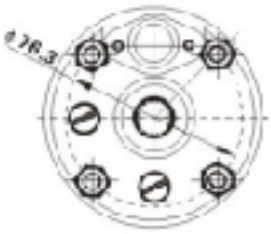

- **THREE PHASE DIMENSIONS OF MOTOR UNIT:**

Type	Motor power		Current Rated	Efficiency %	Power factor	Length (mm)
Three phase 380V-415V 50Hz	kW	HP	A	η	cos φ	
4PD-1.1	1.1	1.5	3.0	66	0.74	428
4PD-1.5	**1.5**	**2**	**3.9**	**68**	**0.76**	**473**
4PD-2.2	2.2	3	5.5	70	0.77	665
4PD-3	**3**	**4**	**7.3**	**71**	**0.77**	**580**
4PD-4	4	5.5	9.6	74.5	0.78	645
4PD-5.5	**5.5**	**7.5**	**13.7**	**75.5**	**0.79**	**755**
4PD-7.5	7.5	10	18.8	76	0.80	955

SUMO® INDUSTRIAL

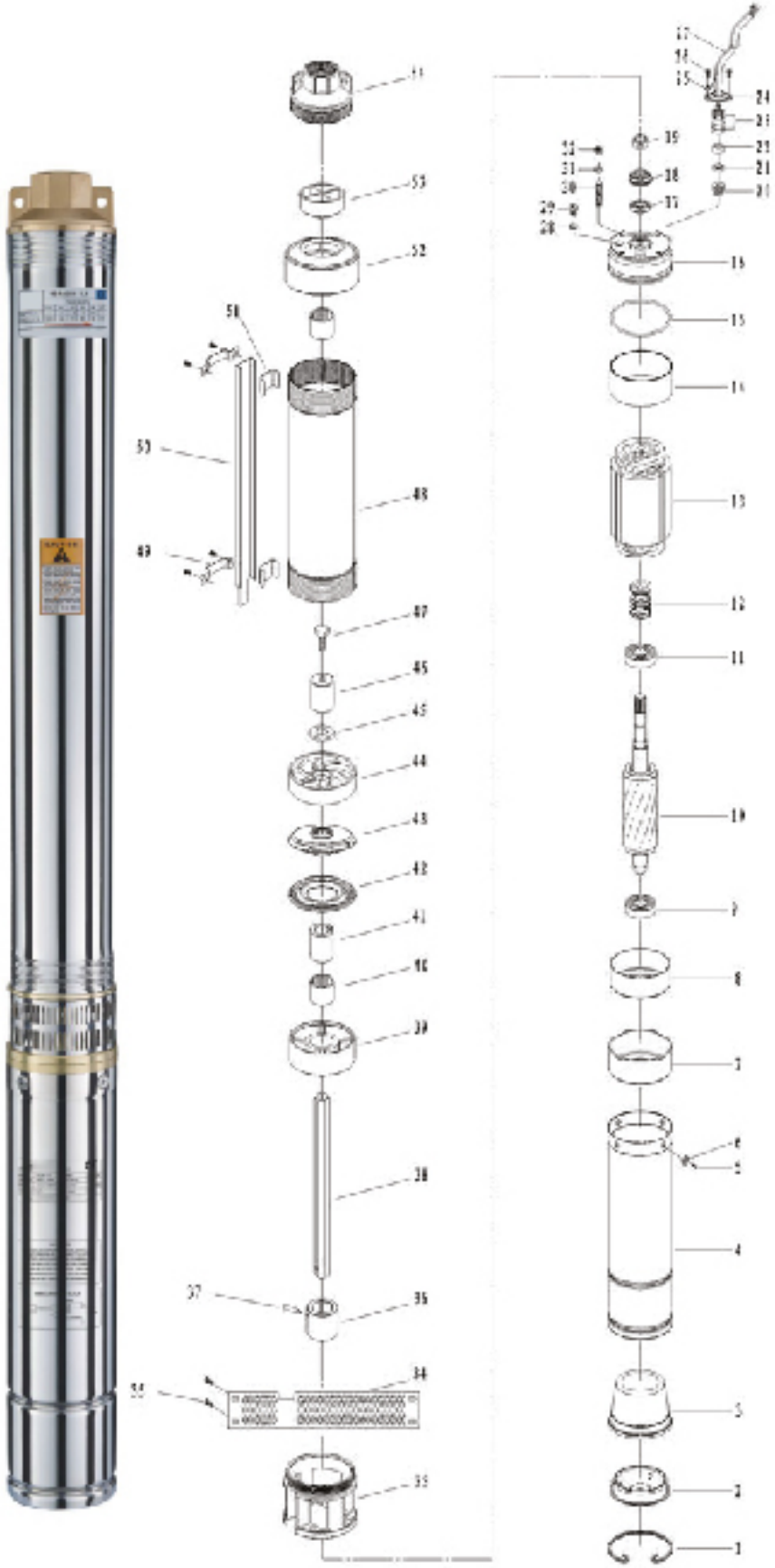

1	Clamping spring
2	End cover
3	Guiand sleeve
4	Motor pipe
5	Screw
6	Locking ring
7	Bearing seat
8	Insulation cover
9	Deep groove ball bearings
10	Motor rotor
11	Deep groove ball bearings
12	Mechanical seal
13	Motor stator
14	Support cover
15	'O'ring
16	Oil chamber
17	Skeleton oil seal
18	Sand proof cover
19	Sand proof cap
20	Seal set
21	Retainer
22	Cable shield sleeve
23	Pressing block
24	Pressing plate
25	Grounding terminals
26	Screw
27	Cable
28	'O'ring
29	Screw
30	Stud
31	Washer
32	Nut
33	Suction support
34	Strainer
35	Screw
36	Coupling
37	Shaft pin
38	Shaft
39	Intermediate support
40	Guide bush
41	Bearing bush
42	Diffuser cover
43	Impeller
44	Diffuser
45	Sealing gasket
46	Bearing bush
47	Screw
48	Pump pipe
49	Inlet pipe
50	Cable cover
51	Cable shield
52	Valve seat
53	Valve
54	Outlet

SUMO INDUSTRIAL

SERIES 3"
PERIPHERAL SUBMERSIBLE PUMPS

3SKm

เหมาะกับการใช้งานในบ้านพักอาศัย
อัตราการไหล 1 คิว/ชม. ที่ความสูง 36 เมตร
สายไฟสีดำ 4x1 mm² สายยาว 30 เมตร

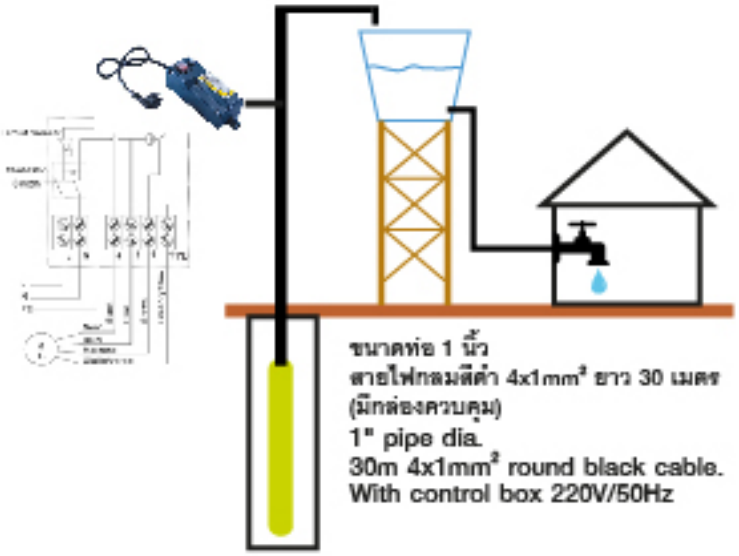

• PERFORMANCE TABLE:

rpm:2900 Outlet:G 1"

Type		Motor power		Capacity and head								Length (mm)	Price
Single phase 220–240V ~ 50Hz	Three phase 380–415V ~ 50Hz			m³/h	0	0.5	0.8	1	1.5	2	2.4		
		kW	HP	l/min	0	8	13	17	25	33	40		
3SKm75	3SK75	0.55	0.75	Head	41	30	26	23	15	7	–	478	
▶ 3SKm100	3SK100	0.75	1	(m)	58	45	40	36	25	12	4	535	8,000.-

▶ = มีสินค้า

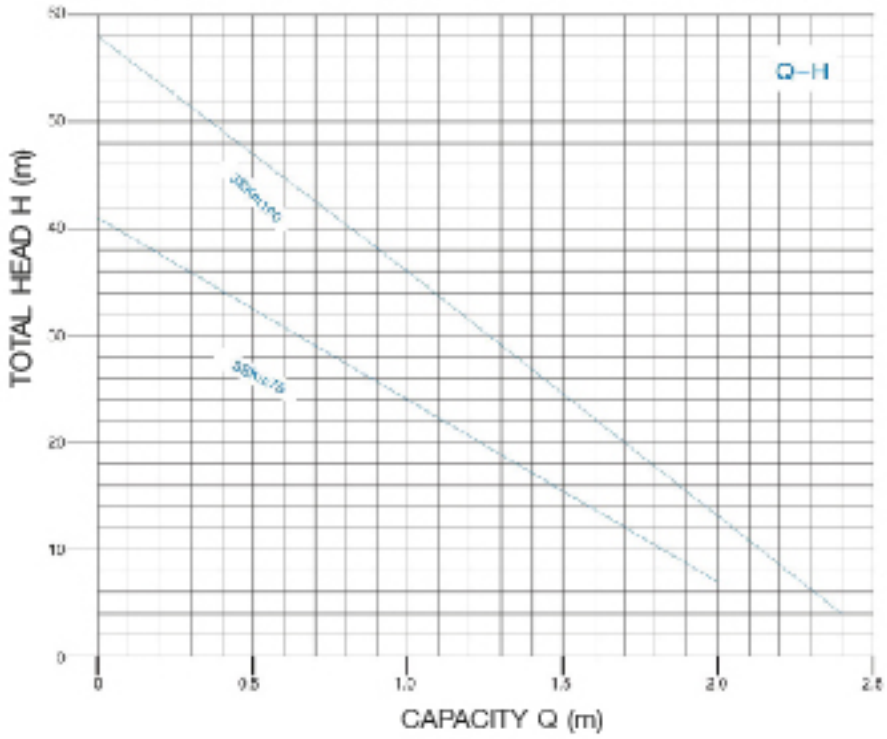

3 SK m 100

- Motor power (Hpx100)
- Single phase motor (Three phase without m)
- SK Series submersible pump
- Well diameter: >86mm (3")

• Pump/Motor

Continuous service.
Q_{max}: 2.5(m³/h)
Insulation class: B
Protection grade: IP 68
Maximum diameter: ϕ 75 mm
Highest temperature of liquid: 35℃

3 ใบพัดทองเหลือง

OUTLET G 1"

SUMO INDUSTRIAL

SERIES 4" PERIPHERAL SUBMERSIBLE PUMPS

4SKm

เหมาะกับการใช้งานใน**บ้านพักอาศัย**
อัตราการไหล 1.5 คิว/ชม. ที่ความสูง 54 เมตร
สายไฟสีดำ 4x1.5mm^2 สายไฟยาว 30 เมตร

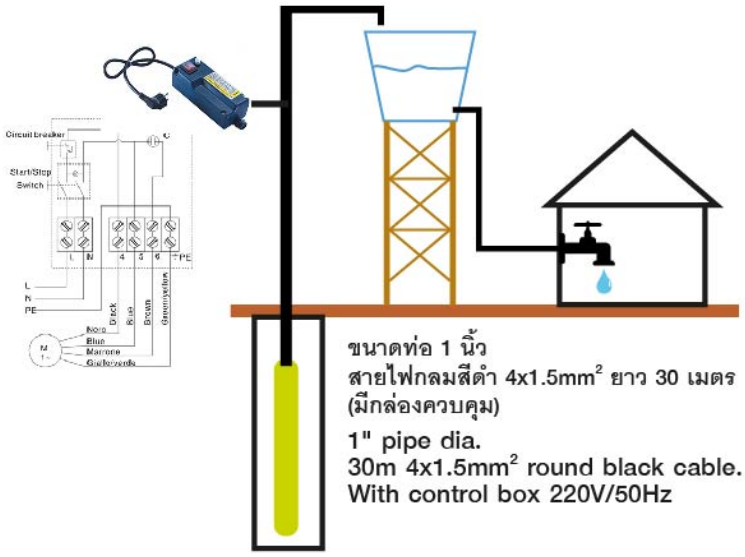

ขนาดท่อ 1 นิ้ว
สายไฟกลมสีดำ 4x1.5mm^2 ยาว 30 เมตร
(มีกล่องควบคุม)

1" pipe dia.
30m 4x1.5mm^2 round black cable.
With control box 220V/50Hz

• PERFORMANCE TABLE: rpm:2900 Outlet:G1"

Type		Motor power		Capacity and head								Length (mm)	Price
Single phase 220–240V ~ 50Hz	Three phase 380–415V ~ 50Hz			m³/h	0	0.5	1	1.5	2	2.5	3.5		
		kW	Hp	l/min	0	8	17	25	33	42	58		
4SKm 100	4SK 100	0.75	1	Head (m)	61	50	39	30	19	10	—	485	
▶ **4SKm 150**	**4SK 150**	**1.1**	**1.5**		**99**	**83**	**68**	**54**	**38**	**22**	—	**552**	*9,500.-*
4SKm 200	4SK 200	1.5	2		140	120	100	81	60	37	3	606	

▶ = มีสินค้า

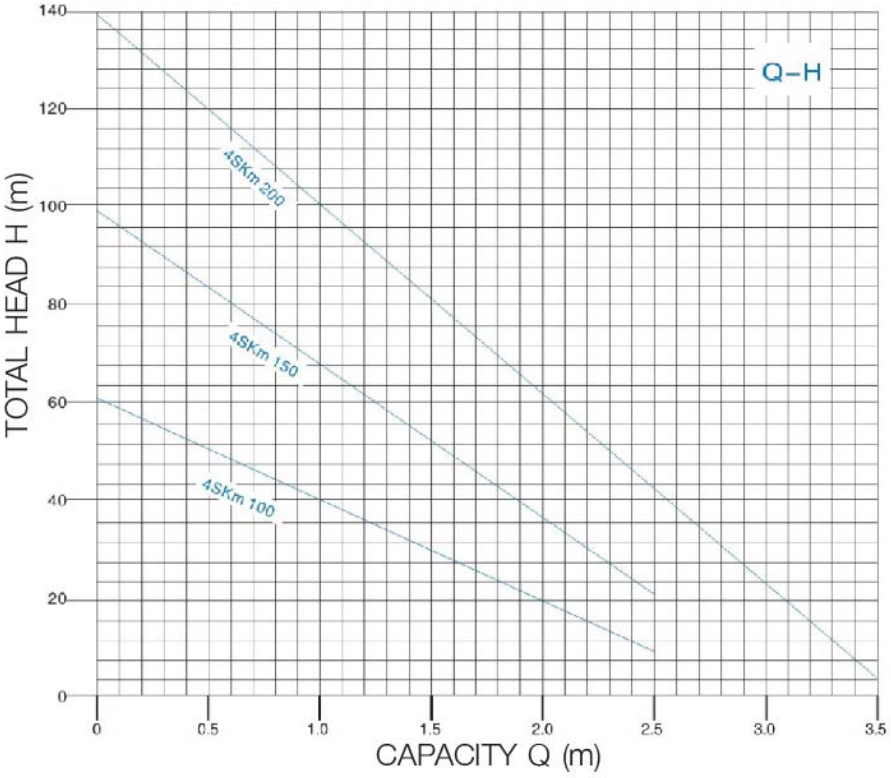

4 SK m 100
- 100 — Motor power(Hpx100)
- m — Single phase motor (Three phase without m)
- SK — SK Series submersible pump
- 4 — Well diameter: >100mm(4")

• Pump/Motor

Continuous service.
Q_{max}: **3.5(m³/h)**
Insulation class: **B**
Protection grade: **IP 68**
Maximum diameter: **ϕ 95 mm**
Highest temperature of liquid: **35℃**

3 ใบพัดทองเหลือง OUTLET G 1"

SUMO® INDUSTRIAL

SERIES 3" PERIPHERAL SUBMERSIBLE PUMPS

3SKm75

The structure, code and name of the pump

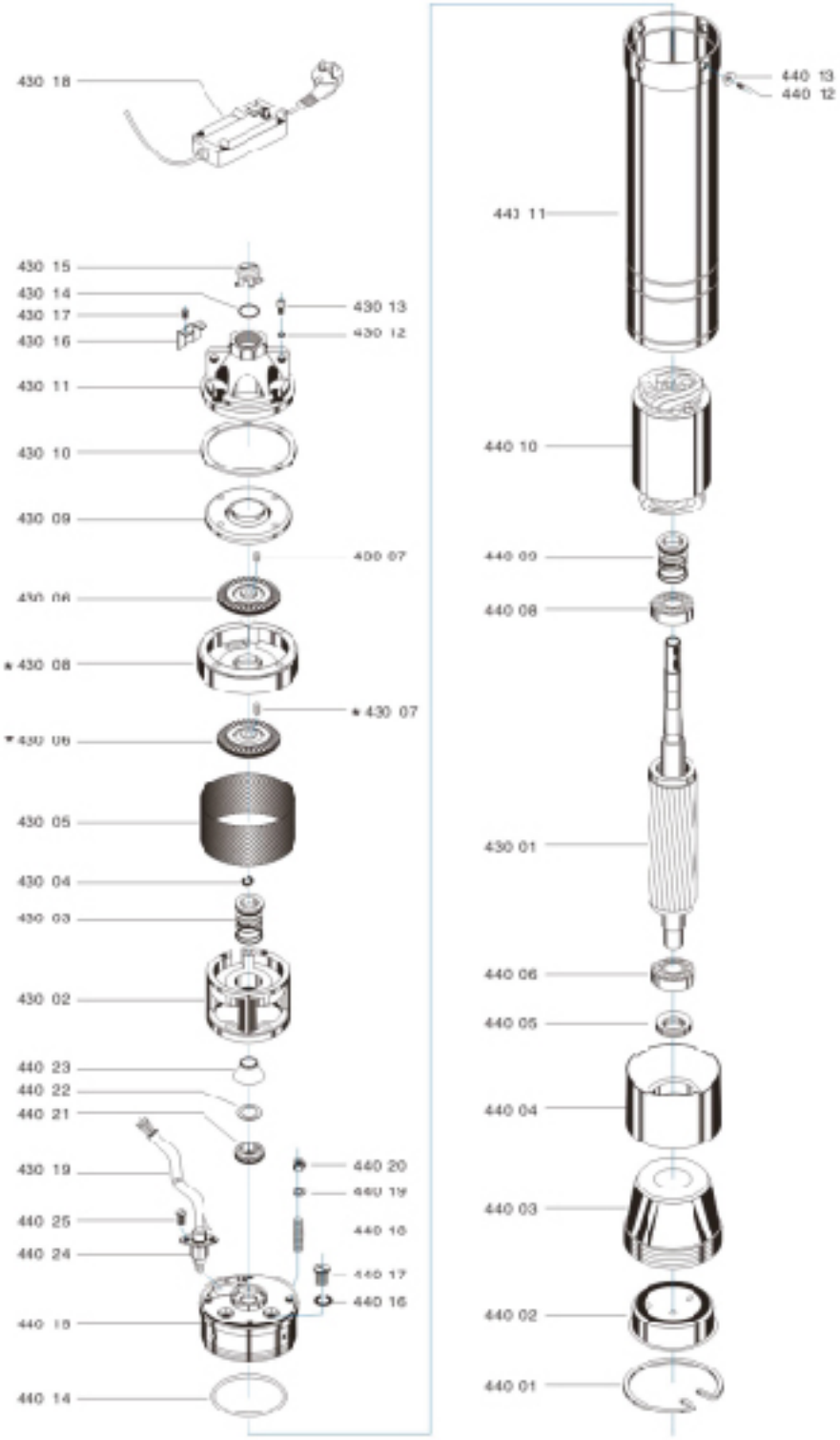

430 01	Motor rotor
430 02	**Suction support**
430 03	Mechanical seal
430 04	**Shaft ring**
430 05	Filter net
430 06	**Impeller**
430 07	Key
430 08	**Pump body**
430 09	Pump cover
430 10	**Gasket**
430 11	Discharge chamber
430 12	**Spring gasket**
430 13	Screw
430 14	**"O"Ring**
430 15	Valve
430 16	**Cable cover**
430 17	Screw
430 18	**Starting controller**
430 19	Cable
440 01	**Clamping spring**
440 02	End cover
440 03	**Rubber cup**
440 04	Bearing seal
440 05	**Thrust bearing**
440 06	Deep groove ball bearings
440 08	**Deep groove ball bearings**
440 09	Mechanical seal
440 10	**Motor stator**
440 11	Motor pipe
440 12	**Screw**
440 13	Locking ring
440 14	**"O"ring**
440 15	Oil chamber
440 16	**"O"ring**
440 17	Screw
440 18	**Stud**
440 19	Washer
440 20	**Nut**
440 21	Static ring
440 22	**Gasket**
440 23	Sand proof cap
440 24	**Cable sheld sleeve**
440 25	Screw

- Only for 3SKm 150

SUMO® INDUSTRIAL

SERIES STARTING CONTROLLERS QK101

QK101 Series starting controller for single phase motor

TECHNICAL DATA:

- **Single phase motor starting controller**

Single phase capacitor operating motor is equipped with an external capacitor and a over-load protector in the starting controller which can automatically break down power supply (manual recover) when motor over-loading.

QK 1 0 1 - 0.37

- 0.37 — Motor power(kW)
- 1 — Design number
- 0 — Manual controller
- 1 — Single phase
- QK — QK Series controller

- **Suitable application range**

-Type of motor: Single phase motor
-Motor power: 0.18-1.5kW
-Voltage: 220-240V~
-Frequency: 50Hz

- **Product functions**

-Protect against short circuit
-Protect against over current

- **Operating method**

-Manual control

- **Installation environment index**

-Grade of protection: IP20
-Environment temperature: -25℃-+55℃
-Environment humidity: (20-90)%RH

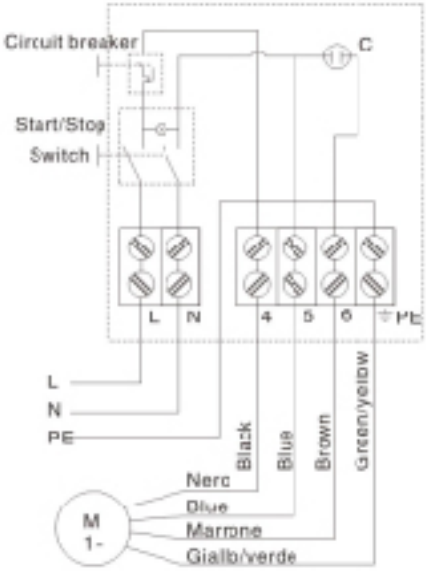

Type Singlephase 220V-240V 50Hz	For Model	Motor power		Motor Current Rated	Capacitor 450V	Circuit breaker Current
		kW	Hp	A	μF	A
QK101-0.25		0.25	0.33	2.1	16.5	3
QK101-0.37		**0.37**	**0.5**	**2.9**	**18**	**4**
QK101 0.55	3SKm75	0.55	0.75	4.2	26	5
QK101-0.75	3SKm100	**0.75**	**1**	**5.4**	**30**	**6**
QK101-1.1		1.1	1.5	7.7	35	8

SUMO INDUSTRIAL

SERIES

DIMENSION TABLE OF CABLE IN WELL

QK

DIMENSION TABLE OF CABLE IN WELL

- The following table shows the max.Length from starter of motor to pump in well.

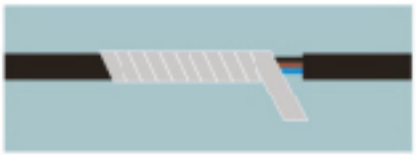

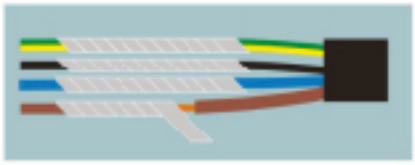

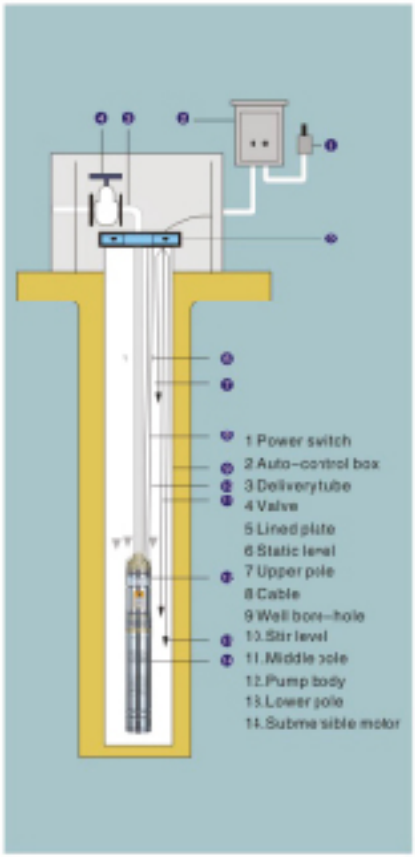

- Single phase capacitor operating submersible motor in well
- **220-240V~/50Hz**

SIZE	kW	I_n(A)	1.5 mm²	2.5 mm²	4 mm²	6 mm²	10 mm²
4"	0.37	4	111	185	295		
	0.55	5.8	80	133	211	315	
	0.75	7.5	58	95	153	229	377
	1.1	7.3	48	79	153	190	316
	1.5	10.2	34	57	92	137	228
	2.2	14		43	58	102	169

- Three phase asynchronous submersible motor
- **380-415V~50Hz**

SIZE	kW	I_n(A)	1.5 mm²	2.5 mm²	4 mm²	6 mm²	10 mm²	15 mm²	25 mm²	35 mm²
4"	0.37	1.4	768							
	0.55	2.2	489	811						
	0.75	2.3	416	691						
	1.1	3.4	281	467	744					
	1.5	4.2	219	363	579	862				
	2.2	5.5	163	264	406	605	907			
6"	3	7.9	113	188	300	447	736			
	4	9.6	89	147	235	350	578	909		
	5.5	13.6	66	109	174	260	427	671		
	7.5	17.6	49	81	130	193	319	501	746	
	9.2	21.8		65	103	154	254	400	611	833
	11	24.8		56	89	133	219	345	526	719
	15	34			66	98	161	254	729	974
	18.5	42				80	132	208	317	432

- If it used the star-delta connection to start the motor that the current will reduce $\sqrt{3}$ (1 × 0.58), so the length of cable can increase $\sqrt{3}$ (L × 1.73) than the data in table.
- For example in fact the current of submersible pump is lower than the load current 10%,the length of cable can be longer 10% than the data in table.
- In order to reduce operating loss as far as possible,selected the cross section can much increase than the data in table. Especially for the condition which operating voltage is lower than the rated voltage.